ESTIMATING THE TRANSMITTED RADIATION INTO A GREENHOUSE

V. DEMİR A. YAĞCIOĞLU T. GÜNHAN

Department of Agricultural Machinery, Faculty of Agriculture
Ege University, 35100 Bornova-İzmir, Turkey

ABSTRACT

The quantity of radiation at the top of the plant is the most important limiting factor for growing in a greenhouse. The quantity of this radiation mainly depends on the solar geometry, latitude and orientation of greenhouse, type and slope of roof, length, width and height of walls of greenhouse, light transmittance of covering materials and shading effect of the structural components of the greenhouse.

In this study, a computation procedure which includes all factors mentioned above for estimating the quantity of Photosynthetic Active Radiation (PAR) inside a greenhouse was developed and also a computer code for simplifying the calculations was written.

INTRODUCTION

Greenhouses are special agricultural buildings used to grow hot season crops during cold periods of the year. Their surfaces are covered with transparent materials and the external growing factors in greenhouses are tried to keep at optimum levels. The most important external growing factors can be listed as in the following:

- The amount of the light energy at the top of the plant canopy.
- The amount of the water at the root medium.
- The CO_2 concentration of the greenhouse air.
- The air temperature of the greenhouse.
- The relative humidity of the greenhouse.
- Combinations of fertilizers at the root medium.
- The temperature of the root medium.

Growing and development of the greenhouse plants are affected by a combination of all these external growth factors. The growth of a crop is limited by that factor which is minimally present in this combination while many of these growth factors interact with each other. For example, the amount of light energy at the top of the plants affects the temperature of growing medium, the relative humidity of greenhouse air, and consequently the rate of photosynthesis. For these reasons, the level of radiation inside a greenhouse is the most important limiting factor for growing.

Inside a greenhouse, the quantity of light energy at the level of crop canopy mainly depends on the solar geometry, the latitude and orientation of greenhouse, the type and slope of roof, the length, width and height of walls, optical characteristics of covering materials and the shading effect of the components of greenhouse structure.

In this study, a computation procedure which includes all factors mentioned above for estimating the quantity of Photosynthetic Active Radiation (PAR, 400-700 nm) recieved by unit growing area inside a greenhouse was developed. Also, a computer code for simplifying the calculations was written. The main steps of the computer programme are shown in appendix.

Measured values of monthly averages of hourly total sun radiation of various regions in Turkey were used in this computation procedure.

In order to predict the amount of solar energy that reaches the growing area inside a greenhouse, the following values must be obtained in the following order:

- Amount of sun energy that reaches the external surfaces of the greenhouse.
- Amount of refracted light energy inside the greenhouse.
- Amount of light energy that reaches the growing area.

METHOD

Prediction of the Amount of the Solar Energy That Reaches the Exterior Surfaces of a Greenhouse

The orientations of the exterior surfaces and the position of the sun in the sky are important for estimating the amount of sun light that reaches the exterior surfaces. To estimate the quantity of the incident light energy on the surfaces the following steps of action were carried out:

- The external surfaces of greenhouse were described as shown in Fig. 1.

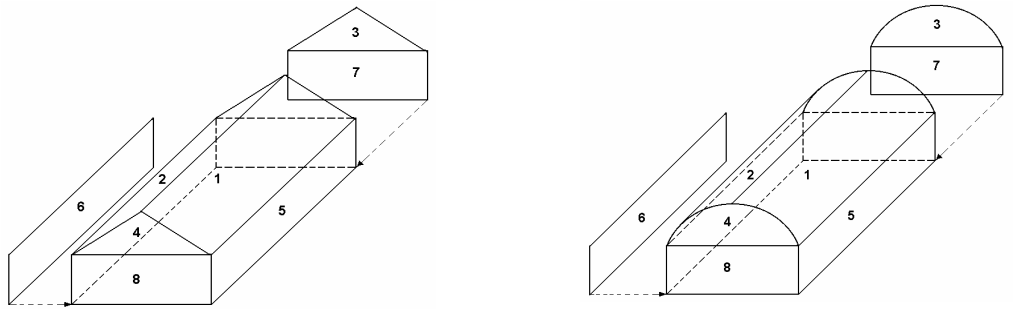

Figure 1. External surfaces of a greenhouse

- The angle of orientation of the greenhouse must be known.
- The azimuth angle of each one of the external surfaces of the greenhouse was calculated separately, taking into account the orientation angle of the greenhouse.
- The values of latitude, altitude and the monthly averages of hourly total solar energy of many places in Turkey were stored in an input file so that the total sun energy that reaches the specific location of greenhouse can be calculated.
- The tilt angles of the surfaces of the greenhouse were chosen.

  In order to determine the tilt angle of the roof of a curved roof greenhouse, the curve of the roof was divided into 40 equal parts and each segment was assumed as a straight line and the slope angles of these parts were calculated separately (Fig. 2).

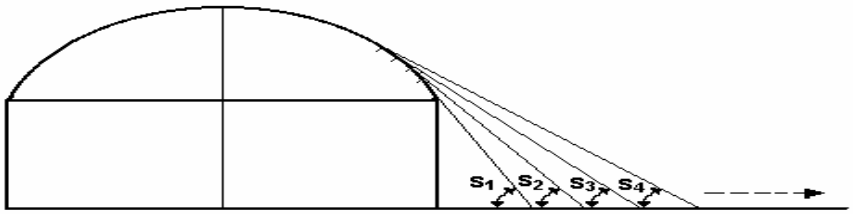

Figure 2. Slopes of a curved roof

- The length of the daytime was calculated.
- The first and the last incident times of the sun rays on each surface of the greenhouse were calculated
- The average positions of the sun in the sky were calculated for the middle point of each hour of the daytime.
- The amount of beam radiation that reaches the exterior surfaces was calculated for the middle point of each hour between the first ant last incident moments of the sun's ray on the surfaces, taking into account measured values of total sun energy of the location of the greenhouse.
- The diffuse radiation that reaches the exterior surfaces was calculated for the middle point of each hour of day length, taking into account measured values of total sun energy of the location of the greenhouse.
- Reflected radiation around the greenhouse was ignored.

Prediction of the Amount of Transmitted Sun Energy Into a Greenhouse

The amount of the transmitted sun energy into the greenhouse depends on the total solar energy that reaches the external surfaces, the incident angle of sun rays, and the optical characteristics of the covering material of the surface.

To estimate the amount of the transmitted energy into the greenhouse the following steps of action were carried out:

- The refraction indices, the extinction coefficients and thicknesses of several covering materials were stored in a file of the computer programme.
- The incidence angles of the beam radiation for each surface of greenhouse were calculated for the middle point of each hour of the computing period.
- The area of the obstacles of the greenhouse to the sun rays were determined.
- The incidence angles of the diffuse sky radiation were calculated by using empirical "mean equivalent incidence angle equation" and was assumed to be constant.

The amounts of refracted, reflected and absorbed radiation by each surface of the greenhouse were calculated by using Snell Law, Fresnel equations and Bouger-Lambert Law, considering the azimuth and tilt angles of the surfaces, incidence angles of the beam and diffuse radiation, optical characteristics of the covering materials and the obstruction area of the components of the structure.

Prediction of the Amount of Radiation That Reaches the Growing Medium

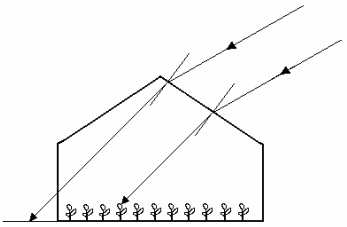

Figure 3. Refracted light into a greenhouse

All the radiation which passes through the covering material does not reach the growing medium. A substantial fraction of the light rays which falls on the opposite walls leaves the greenhouse again due to refraction. The remainder, such as 2-3 % of this radiation is reflected back and stay in the greenhouse. For simplicity purposes, all the radiation that reached the opposite walls was assumed to pass through the covering material and leave the greenhouse (Fig. 3). In other words, this fraction of radiation was assumed to be negligible, and thus it was ignored.

For estimating the amount of the radiation that reaches the growing medium the following steps were carried out:

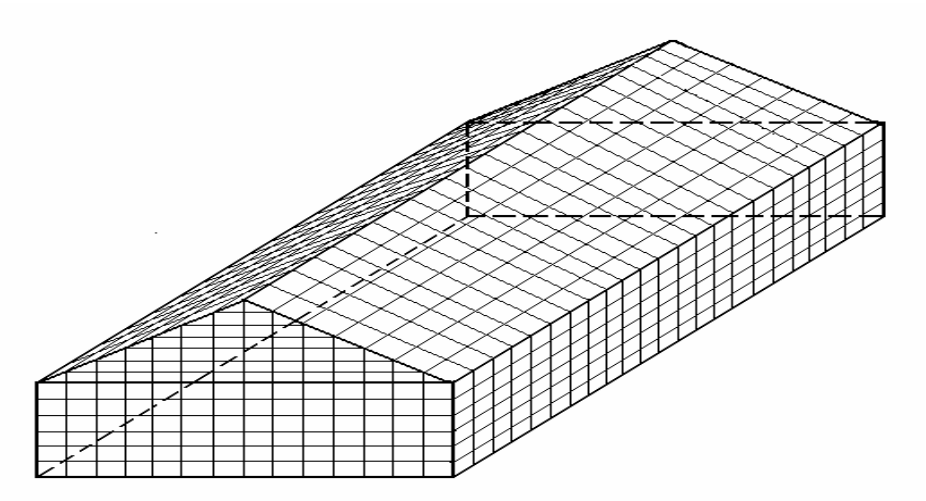

- All of the surfaces of the greenhouse have been divided into a grid of 0.5x0.5 m mesh (Fig. 4).
- It was assumed that beam and diffuse radiation were incident at each node that makes up the grid.
- The refraction angle and the route of passage of each beam that refracted from the nodes were calculated (Fig. 5).

Figure 4. Grid of the surfaces of a greenhouse and nodes

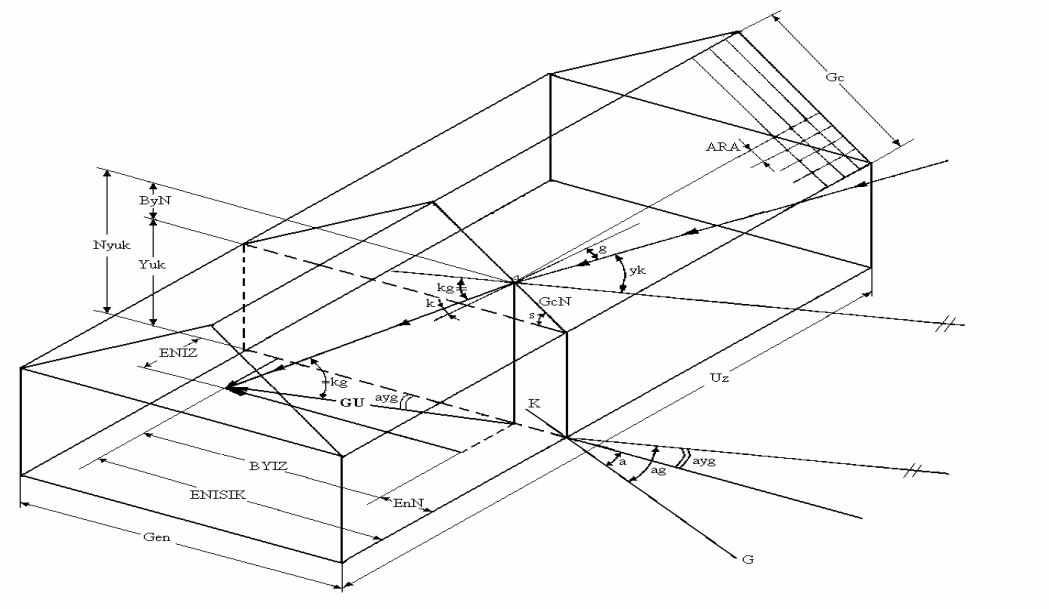

Figure 5. Determination of the route of passage of each beam into a greenhouse

- Whether a beam would fall on the opposite wall or not was determined by taking into account the route of passage of each beam in the greenhouse.
- Those beams that reached the opposite walls were not taken into consideration.
- The area of the each surface of the greenhouse that transmitted beams which do not reach the opposite walls were called "effective surface" and their area were calculated.
- The hourly total sun energy that reached the growing medium was calculated by taking into account the sum of the hourly beam and diffuse radiation which passes through the effective surface of the greenhouse.
- The daily total sun radiation energy inside the greenhouse was calculated by taking into account the sum of the hourly energy that reach the growing area in the daylight period.
- The 45 % of the daily total sun radiation inside the greenhouse was assumed to be the total PAR.
- The PAR per unit growing area was calculated by dividing the daily amount of PAR to the growing area.

RESULTS

The results from some simulation using this computation procedure are summarized below:

- Daily PAR energy on per unit floor area of a greenhouse decreases while the length of greenhouse increases (Fig. 6.a).
- Daily PAR energy on per unit floor area of a greenhouse decreases while the width of greenhouse increases (Fig. 6.b).
- Daily PAR energy on per unit floor area of a greenhouse increases while the height of the wall of greenhouse increases (Fig. 6.c).
- If the greenhouse is orientated so that the azimuth angle of one of the long side is 120-150 degrees, the daily PAR energy on per unit floor area will reach a maximum value (Fig. 6.d).
- Daily PAR energy on per unit floor area of a greenhouse increases as tilt angle of the roof increases. But the importance of the effect of this angle on the amount of PAR decreases for the angles more than 30 degree (Fig. 6.e).
- Daily PAR energy on per unit floor area of a greenhouse with a curved roof is more than a greenhouse of the same size with a gable roof.

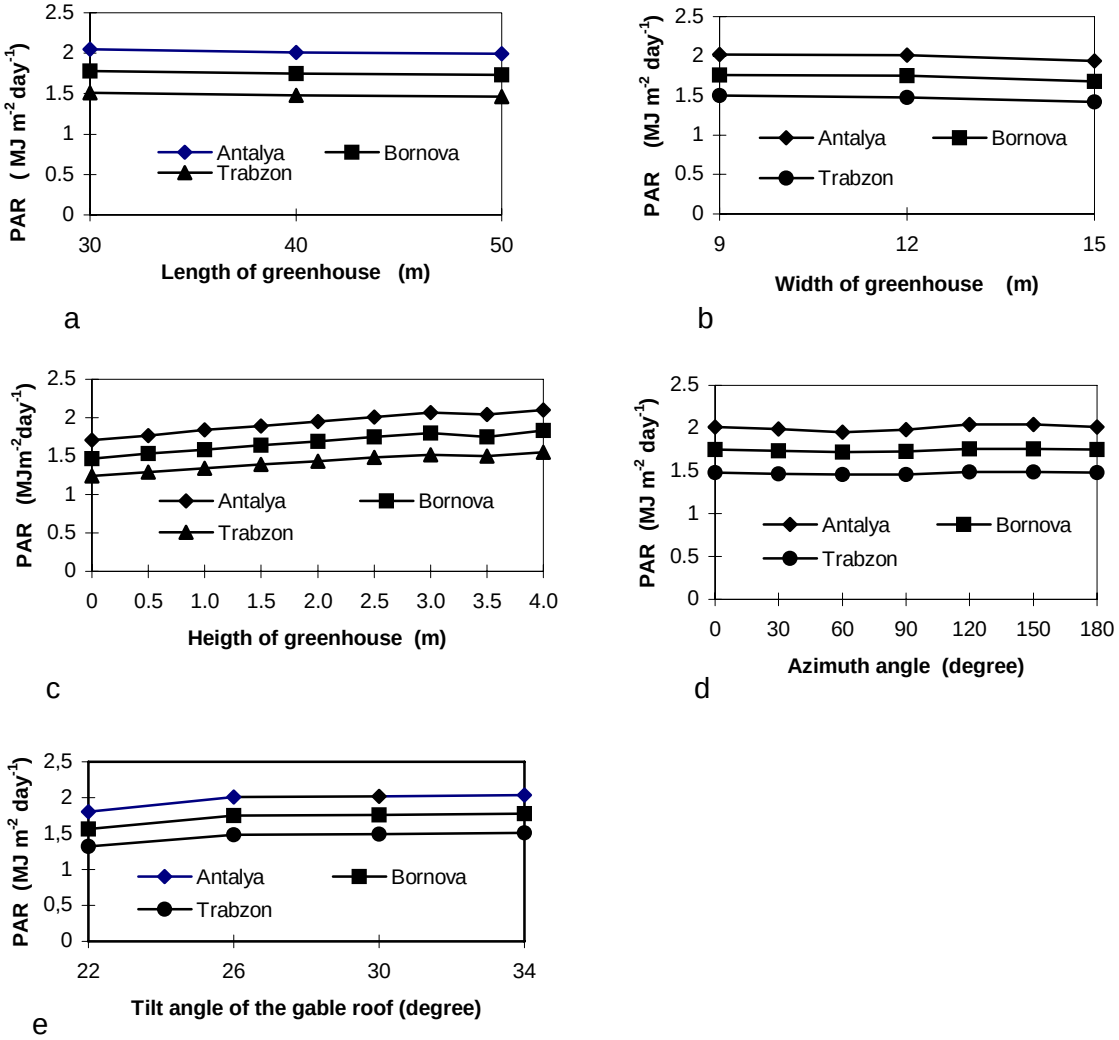

Figure 6. The results of some simulation studies on the gable roofed greenhouses which were carried out by using this computation procedure.

CONCLUSION

The quantity of average hourly, daily, monthly PAR that reaches the growing area inside the greenhouse on any location in Turkey can be predicted by this calculation model and computer programme and also the effects of the shape, dimensions, orientations and the optical characteristics of the covering materials of the greenhouse can be estimated.

REFERENCES

Amsen, M.G. (1985). A simple method to calculate improvements of diffuse light distribution in detached greenhouse. *Acta Horticulturae*, 174, 105-109.

Baille, M., Baille, A. (1990). A simple model for the estimation of greenhouse transmission: influence of structures and internal equipment. *Acta Horticulturae*. 281, 35-46.

Başçetinçelik, A. (1981). Sera örtü malzemelerinin ışık geçirgenliği ile 37° ve 41° enlemlerindeki güneş ışınım geçirgenliği üzerinde bir araştırma. Doçentlik Tezi.

Bowman, G.E. (1970). The transmission of diffuse light by a sloping roof. *Trans. ASAE*. 15, 100-105.

Critten, D.L (1984). The effect of geometric configuration on the light transmission of greenhouses. *J.AER*. 29, 199-206.

Critten, D.L. (1986). A general analysis of light transmission in greenhouses. *J.AER*. 33, 289-302.

Critten, D.L., and B.J. Legg (1987). A general theory of light transmittance of complex structures. *J. AER*. 36, 125-140.

Critten, D.L. (1989). Light transmission into greenhouses. *Acta Horticulturae*. 245, 377-383.
Duffie, J.A., and Beckman W.A. (1980). *Solar engineering of thermal processes*. John Wiley and Sons. N.Y.
Gueymard, C. (1989). An atmospheric transmittance model for the calculation of the clear sky beam, diffuse and global photosynthetically active radiation. *Agricultural and Forest Meteorology*, 45, 215-229.
Jaffrin, A., Urban, L. (1990). Optimization of light transmission in modern greenhouses. *Acta Horticulturae.* 281. 25-33.
Manbeck, H.B., and R.A. Aldrich, (1967). Analytical determination of direct visible solar energy transmitted by rigid plastic greenhouses. *Trans. ASAE*. 10, 464-567,572.
Mermier, M., and A. Baille (1988). The optical properties of plastics materials for greenhouses and screens. *Plasticulture*, 77, 11-24.
Pandopulos, F., and M. Grafiadellis (1990). A study of light transmissivity of different plastic materials used for covering greenhouses. *Acta Horticulturae*, 287, 99-107.
Rosa, R., A.M. Silva and A. Miguel (1989). Solar irradiation inside a single span greenhouse. *Trans. ASAE*. 43, 221-229.
Skov, O. (1989). Light transmission in greenhouses. *Acta Horticulturae*, 245, 86-93.
Van den Kieboom, A.M.G., and J.A. Stoffers 1985. Light transmittance under diffuse radiation circumtances. *Acta Horticulturae,* 174, 67-73.
Yağcıoğlu, A., V. Demir and T. Günhan(1998). Determination of basic greenhouse shape and dimensions which receives the maximum photesythetic active radiations in various regions of Turkey. Ege University Research Fund Project Final Report No. 96-ZRF-045. Bornova-İzmir, Turkey.
Türkiye Güneş Enerjisi Işınım Şiddetleri Saatlik Ortalama Değerleri Bilgi Bankası (1983). EİEİ Genel Direktörlüğü. Yayın No.83-25. Ankara.

APPENDIX

